KGN FAN Type Ionizer
風扇型靜電消除器

KIF-1000A/2000A/3000A 使用說明書

1. 產品內容清單

本體
（含固定座）

標準配件：

- I/O 連接埠端子 (KIF-OC1)
- 使用說明書（本冊）
- 接地線
- 安全濾網
  (KIF-OF1 for KIF-1000A)
  (KIF-OF2 for KIF-2000A / KIF-3000A)

選購品：

- 交流電源轉換器
  (KIC-03 for 1000A/2000A)
  (KIC-05 for 3000A)

2. 特點與優點

❶ 體積小、重量輕、出風可調，用於桌上或設備都很方便。
❷ 高周波交流放電，離子綿密可深入凹處，確實消除靜電。
❸ 高精度離子平衡。
❹ 近處、遠處皆可高速除電。
❺ 放電異常時， 警示燈及接點輸出，有效監控 。
❻ 自動清針模組， 維護容易。

3. 產品用途說明

本產品風扇型靜電消除器，係針對電子部品、塑膠製品、薄膜製程等各種產業，在生產過程中，能簡單快速的去除靜電，大幅提升產品的品質及生產良率。

4. 除電時間（sec）

型號 \ 除電距離	300mm		600mm		900mm		1200mm	
	+	-	+	-	+	-	+	-
KIF-1000A	1.5	1.7	3.4	3.6	6.8	7.2	9.4	11.5
KIF-2000A	1.1	1.3	1.6	2.2	2.9	3.8	4.9	5.7
KIF-3000A	1.1	1.3	1.6	2.2	2.7	3.5	3.5	4.5

註：本表數據係出廠檢驗值，非保證值，實際除電時，視現場環境而定。

5. 規格

		KIF-1000A	KIF-2000A	KIF-3000A
離子產生方式		電暈放電		
放電針電壓施加方式		高頻AC 約 2KV,72KHz		
靜電消除時間（由±1000V至±100V）★1		約1.5秒	約1秒	
離子平衡		±15V		
風量 CFM(M³/min)		26~60 CFM (0.74~1.70)	64~150 CFM (1.82~4.26)	128~300 CFM (3.64~8.52)
臭氧量（150mm處）		0.007ppm	0.007ppm	0.014ppm
外部清針控制		電壓入力 (DC10V~30V)		
警報輸出★2	風扇停止	有		
	放電異常	有		
	清針模組異常	有		
環境溫度		0~40ºC (indoors 室內)		
相對濕度		35%~75%，無凝結		
入力電源		DC24V ±5%		
消耗電流		400mA	500mA	800mA
外型尺寸WxHxD(mm)		116x 147 x 64	142 x 178 x 64	300 x 178 x 64
重量（不含固定座） (g)		506	713	1535
本體保固		二年		

★1 依最大的空氣速率測量，位於空氣出口中心距離風扇的正表面 300mm 處，所得之結果。
★2 出力接點信號 NC/NO 面板切換 (50mA)

⚠ 1. 若輸入電源小於 DC24V，則風扇風量及釋放離子量皆會下降，影響除電效果
2. 使用輸出入信號接點前，請先參考 8. 接線範例說明。

6. 外觀、構造

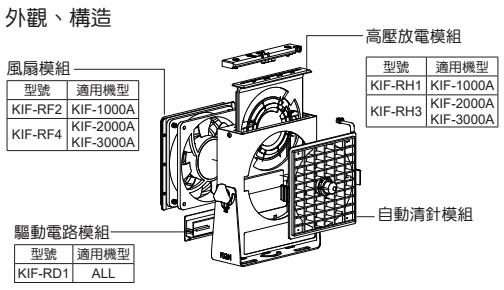

型號	適用機型
KIF-RF2	KIF-1000A
KIF-RF4	KIF-2000A KIF-3000A

型號	適用機型
KIF-RH1	KIF-1000A
KIF-RH3	KIF-2000A KIF-3000A

型號	適用機型
KIF-RD1	ALL

背面

- I/O 連接插座（電源入力及出入力連接用）
- 接地端子（連接接地線）
- 電源入力插座（電源入力用）
- 驅動電路模組

面板

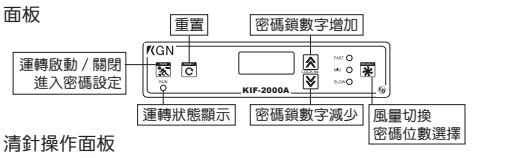

清針操作面板

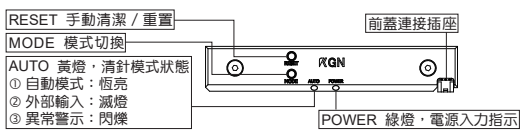

7. 操作方法

① 消除靜電對象，置出風口正前方。建議距離約 300~600㎜。

⚠ 設置場所：請盡量避免使用於有眾多水氣、油氣、灰塵的場所，以及高溫、多濕的場所。

⚠ **本產品不可使用於需要防爆的場合。**

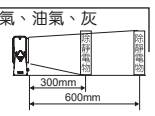

② 本產品前方 200mm、側面及後方 50mm 的範圍內，請不要放置任何物品。此區域範圍內，容易感應到高電壓，而產生帶電的可能。

⚠ 觸電危險：
a. 通電中不要觸摸放電針
b. 保養或維修，請停止運轉
c. 請務必做好接地

③ 安裝濾網可預防物品不慎掉入。
安裝方式：先拆開背面風扇濾網蓋，放入濾網後，重新裝上風扇濾網蓋。

④ 插入 KIC-03 或 KIC-05 交流電源轉換器。

⚠ 使用 I/O 連接插座輸入電源時，請參考 8. 接線範例說明

⑤ 風扇面板控制：

⑤-1 啟動運轉：
a. 待機中：RUN●運轉指示燈閃爍，待機中按 0.5 秒啟動運轉。
b. 運轉中：RUN●運轉指示燈恆亮。

⑤-2 停止運轉：
a. 運轉中：RUN●運轉指示燈恆亮，運轉中按 0.5 秒後停止運轉。
b. 待機中：RUN●運轉指示燈閃爍。

⑤-3 調整風量：
按 調整風量，強、中、弱三段式風量循環切換。

7-1. 操作方法

⑥ 清針操作面板控制：按 MODE 鍵 1 秒切換狀態
a. 自動（約 12hr) 模式：Auto 指示燈恆亮（外部輸入信號無法控制）
b. 外部輸入模式：Auto 指示燈滅

⚠ 暖機 3~5 分鐘，離子平衡較為穩定

⑦ 外部清針訊號：
pin#5 入力時啟動清針模組，接線方式詳見 8. 接線範例說明。

⑧ 功能設定：按 SELECT 按鍵 5 秒後切換 NO/NC 出力模式。
當變更為 NO 時，中速燈閃爍；當變更為 NC 時，低速燈閃爍。
（出廠時預設為 NO 出力）

⑨ 鎖定（Lock）機能設定

⑨-1 進入鎖定機能：持續按 3 秒，進入 0000 。

⑨-2 輸入鎖定密碼：
a. 調整數字：按 鍵數字可上、下調整。 0000
b. 切換位數：按 可移動位數。 1234
c. 跳出設定：若 10 秒未操作，將自動跳出。

⑨-3 儲存（解除）鎖定密碼：輸入密碼後，短按 後顯示，
L.--0 解除鎖定密碼；L.--1 鎖定密碼

⚠ 若不慎遺忘鎖定密碼，請聯絡服務處為您處理。

8. 接線範例說明

接線範例 1

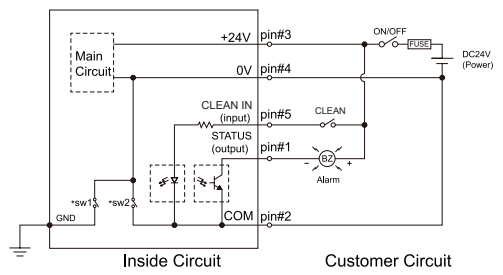

接線範例 2

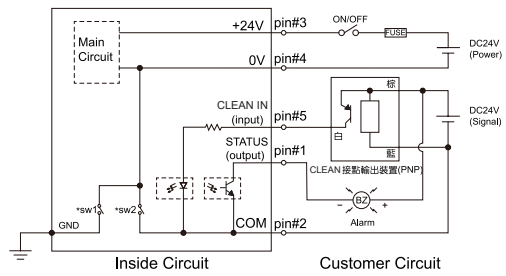

8-1. 接線範例說明

信號切換 （置於驅動電路模組後方）

開關	說明	預設值
1：sw1	選擇電源 0V 與接地端子導通或隔離	ON- 導通
2：sw2	選擇電源 0V 與接點 COM 導通或隔離	OFF- 隔離

本體說明

#4 #3 #2 #1 電源入力插座	pin#1 STATUS OUTPUT pin#2 COM	狀態信號出力點 信號共同端子點（信號 0V 點）
1 2 3 4 5 I/O 連接插座	pin#3 Power DC+24V pin#4 Power GND(0V) pin#5 CLEAN IN(10~30V)	電源 24V 入力點 電源 0V 入力點 清針信號入力點

電源及警告輸出線色說明（選購品）

[White 白]：	STATUS OUTPUT	狀態信號出力點
[Black 黑]：	COM	信號共同端子點
[Red 紅]：	Power DC+24V	電源 24V 入力點
[Green 綠]：	Power GND(0V)	電源 0V 入力點

9. 時序圖說明

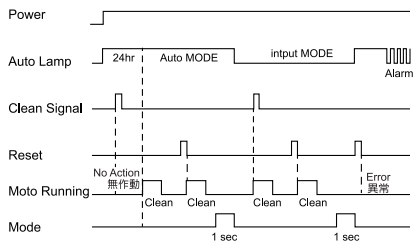

10. 警告

① 請勿在產品規格範圍外使用本產品，若強制使用將會造故障、機能損壞或停止，且會顯著降低產品的使用壽命與效果。
② 請勿用手碰觸放電針，因其前端很尖銳，容易刺傷手指而造成傷害。
③ 實施配線工作時請務必關閉電源，以避免發生觸電的危險。
④ 使用前請確認配線是否正確，錯誤的接線是造成作動異常的主要原因之一。
⑤ 設置場所：請盡量避免使用於有眾多水氣、油氣、灰塵的場所，以及高溫、多濕的場所。**本產品不可使用於需要防爆的場合。**
⑥ 進行檢查、定期清潔保養時，請務必先關掉電源再實施工作，否則會有觸電危險的可能。
⑦ 通電中請勿觸摸放電針，以免發生觸電危險。
⑧ 本產品進行更換高壓模組、驅動模組、風扇模組前，請關閉供應的電源或拔除電源入力端子插頭。
⑨ 使用前，請務必做好接地 !!

11. 注意

① 若輸入電源小於 DC24V，則風扇風量及釋放離子量皆會下降，影響除電效果。
② 暖機 3~5 分鐘，離子平衡較為穩定
③ 使用 I/O 連接插座輸入電源時，或使用輸出入信號接點前，請參考 8. 接線例說明。
④ 使用操作鎖定功能時，若不慎遺忘鎖定密碼，請聯絡服務處為您處理。
⑤ 若風扇異常警示（紅燈）亮起，請參考故障排除，無法處理請聯絡服務處。
⑥ 請勿將本產品應用於消除靜電以外的目的。
⑦ 遇有故障或異常時，請先參考故障排除，若有無法處理的狀態，由於有必要讓專家或以特殊儀器做調整、維修，因此請務必與銷售工程師聯繫。

KGN IONIZER 故障排除參考

狀況	可能原因	對策
無反應	電源未接	接上電源，如 :KIC-03、KIC-05
	電源端子未完全插入主機	重新插入電源入力插頭
	電源入力接線錯誤	參考 8. 接線範例說明
	主機故障	請聯絡服務處
風扇不會轉動：而運轉指示燈閃爍	未啟動運轉	請按運轉鈕啟動風扇
按下操作按鈕沒反應 LED 顯示 L.--1	操作鎖定中	參考密碼鎖定機能設定操作 7. ❸ 說明解除鎖定
風扇無法轉動：且紅色警報燈閃爍	前蓋（自動清針模組）未蓋好	重新蓋上安全前蓋
	前蓋（自動清針模組）的開關故障	請聯絡服務處
風扇無法轉動或太慢：且紅色警報燈亮著	供應電壓或電流容量不足	請確認電源電壓及電流容量
	驅動或風扇模組未設置完成	請重新裝置
	驅動或風扇模組故障	請聯絡服務處，更換模組
紅色警報燈亮著：但是風扇轉動正常，綠色的運轉燈亮著	供應電壓或電流容量不足	請確認電源電壓及電流容量
	驅動模組未設置完成	請重新裝置驅動模組
	高壓放電模組未設置完成	請重新裝置高壓放電模組
	驅動模組故障	請聯絡服務處，更換驅動模組
	高壓放電模組故障	請聯絡服務處更換
靜電無法消散或太慢：綠色的運轉燈亮著，而且風扇轉動正常，紅色的警報燈沒亮	供應電壓或電流容量不足	請確認電源電壓及電流容量
	放電針過於髒污	請清潔放電針
	高壓放電模組潮濕，或前蓋附近有導電物質，金屬、碳粉、污垢等	請確認高壓放電模組及整流前蓋的狀態
	驅動模組故障	請聯絡服務處，更換驅動模組
	高壓放電模組故障	請聯絡服務處更換
	產品性能規格不足	請聯絡服務處，提供改善對策
Auto 指示燈閃爍	清針刷棒遭異物卡住	請確認前蓋是否遭異物侵入
	清針模組前蓋馬達故障	請聯絡服務處
Auto 指示燈恆亮 外部信號無法控制	自動清針模式啟動中，外部信號無法控制	按壓 MODE 鍵切換模式功能

外型尺寸圖 (mm)

KIF-1000A

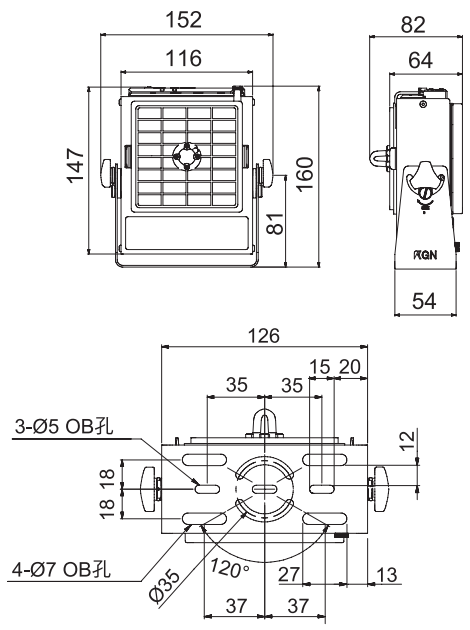

KIF-2000A

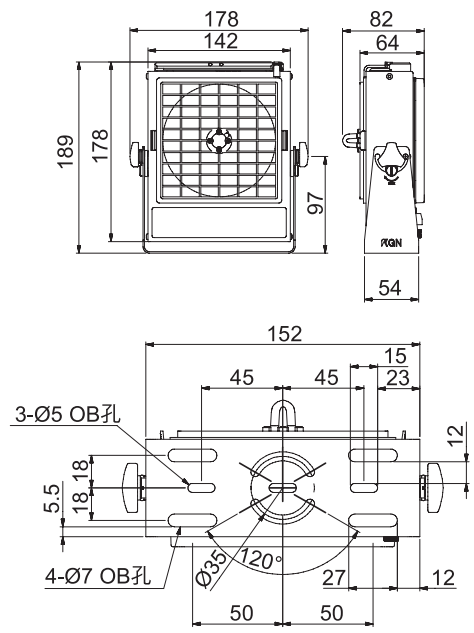

KIF-3000A

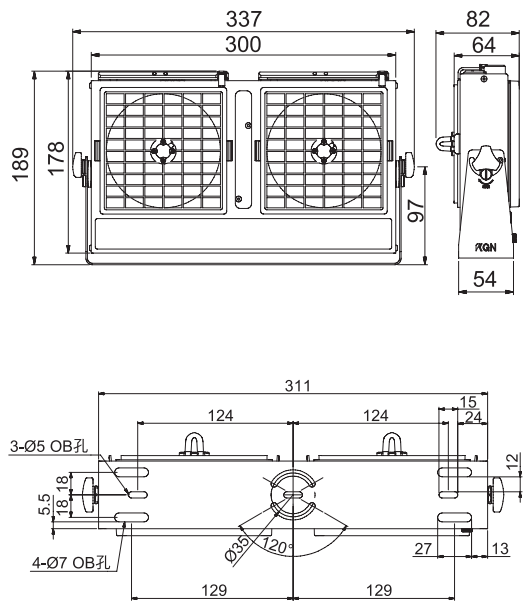

ZE017-202212

備忘錄 NOTE

KGN FAN Type Ionizer
風扇型靜電消除器

KIF-1000A/2000A/3000A Instruction Manual

1.Product list

Package Content

Body
(including mounting kit)

I/O Connector（KIF-OC1）

Operation instruction(this manual)

Ground Wire

Safety Filter
(KIF-OF1 for KIF-1000A)
(KIF-OF2 for KIF-2000A.KIF-3000A)

Option accessories:

AC Power Adapter
(KIC-03 for KIF-1000A.KIF-2000A)
(KIC-05 for KIF-3000A)

2. Features and advantages

① Small volume, light weight, flow volume adjustable,convenient for desk top or inside-equipment applications.
② High frequency AC discharge, high density ion capable of infiltrating into cavities, hence thoroughly eliminating static.
③ High accuracy ion balance.
④ High speed discharge in both short or long distance.
⑤ Whenever abnormal discharge occurs, there will be warning light and contact point output for effective monitoring and control.
⑥ Automati clean module. Easy cleaning and maintenance.

3. Applications of this product

This Model static electricity eliminator is designed for those applications in manufacturing processes for industries of electronic parts, plastic products, films, etc. It can easily and rapidly eliminate static during manufacturing thus drastically promote product quality and higher production successful rate.

4.Decay Time (sec)

Distance / Model	300mm		600mm		900mm		1200mm	
	+	-	+	-	+	-	+	-
KIF-1000A	1.5	1.7	3.4	3.6	6.8	7.2	9.4	11.5
KIF-2000A	1.1	1.3	1.6	2.2	2.9	3.8	4.9	5.7
KIF-3000A	1.1	1.3	1.6	2.2	2.7	3.5	3.5	4.5

The figures in the table above are ex-factory inspection values, but not guarantee values, which will be determined according to the site environment during actual ionizing status.

5. Specification

		KIF-1000A	KIF-2000A	KIF-3000A
Ion Generation		Corona discharge		
Voltage supply method		High-frequency AC Approximate 2KV,72KHz		
Static elimination time ★1 (±1000V~±100V)		1.5 sec	1.0 sec	
Ion balancing		±15V		
Air volume	CFM(M^3/min)	26~60 CFM (0.74~1.70)	64~150 CFM (1.82~4.26)	128~300 CFM (3.64~8.52)
Ozone volume (within 150 mm)		0.007ppm	0.007ppm	0.014ppm
External Pin cleaning control		By power input suspension (DC10V~30V)		
Warning output ★2	Fan stop	YES		
	Discharge error	YES		
	The pin cleaning module is not properly covered	YES		
Ambient temperature		0~40°C (indoor)		
Relative humidity		35%~75%，non-condensing		
Power supply voltage		DC24V ±5%		
Current consumption		400mA	500mA	800mA
Dimension W x H x D	(mm)	116x 147 x 64	142 x 178x 64	300 x 178 x 64
Weight(tripod excluded) (g)		506	713	1535
Warranty (Accessories excluded)		2 Yr		

★1 Measured with maximum air speed and at a location centered in the air output and 300mm away from the fan.
★2 Signaling at output contact, NC/NO panel switch (50mA)

⚠ 1.If the input power is less than DC24V, the air flow of the fan and the quantity of the released ions will drop and affect the ionizing effect.
2.Before using the input/output signal connection, as per 8.Wiring Example Instructions.

6. Appearance and Construction

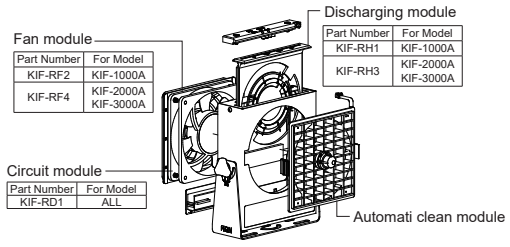

Backside

I/O connection Socket (for power input and I/O connection).
Grounding Terminal (for connecting the Grounding wire).
Power input Socket (for power input)
Circuit module

Panel

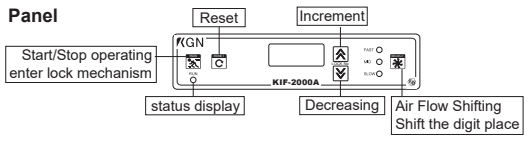

Pin Cleaning Operation Panel

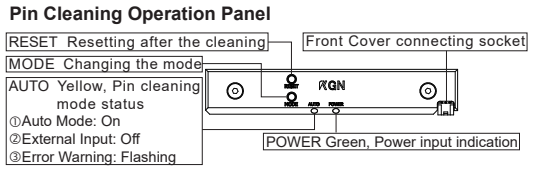

7. Operating Method

① Put the object that is to be subjected to static electricity elimination in front of the air outlet. Distance is suggested to be around 300~600mm.

⚠ Installation location: Try to avoid locations with abundant of steam, oil vapor, dust, and high temperature and high humidity.

⚠ **This product shall not be used at locations where explosion-proof is required.**

② Please keep the range of 200mm ahead, 50mm aside and behind this machine clear of any other objects on the ground that charging is highly possible within that range due to induction by high voltage.

⚠ **ELECTRIC SHOCK DANGER**
a.Never touch the discharge needle when energized
b.Switch off power before going ahead with service or maintenance
c.Be sure that grounding is properly executed

③ Mount the Filter
To prevent inadvertent dropping of articles, the Filter should be installed.
The installation method is as per the figure. Remove the Fan Filter Cover on the backside, load the Filter and then restore the Fan Filter Cover.

④ Input KIC-03 or KIC-05 power adapter .

⚠ When using the I/O connecting socket for inputting power, as pre 8.Wiring Example Instructions.

⑤ Fan panel control:
⑤ -1 Start Running:
a. STANDBY: The RUN indicator flickers.Under Standby, push for 0.5 second and then start running.
b. RUN: The RUN indicator remains illuminated.
⑤ -2 Stop Running:
a. RUN: The RUN indicator remains illuminated. Under Running, push for 0.5 second and then stop running.
b. STANDBY: The RUN indicator flickers.
⑤ -3 Adjust Air Flow:
Push to adjust the air flow and then shift among strong, medium and weak sections of air flow alternately.

7-1. Operating Method

⑥ Pin Cleaning Operation Panel control: Push MODE key for 1 second and changing the mode.
a.Auto (about 12hr) Mode: Auto indicator remains illuminated (external input signal cannot be controlled).
b.External Input Mode: Auto indicator extinguishes.

⚠ Warm up for 3~5 minutes to achieve more stabilized ion balance.

⑦ External Pin cleaning signal :
When inputting Pin #5, the Pin Cleaning Module will be activated. For wire connection method, please refer to "8: Wire Connection Illustration".

⑧ Function Set : Push SELECT key for 5 seconds and then shift NO/NC output mode. When changing to NO, the Medium-Speed light flickers; when changing to NC, the Low-speed light flickers.(When delivery, it will be pre-set as NO output)

⑨ Lock Mechanism setting :
⑨ -1 Enter Lock Mechanism: Push and hold the key for 3 seconds and then enter 0000.
⑨ -2 Enter the lock password:
a.Adjust the digit: Push key and the digit can be adjusted up and down.
b.Shift the digit place: Push and you may shift the digit place.1234
c.Quit setting: If the key remains inactive for 10 seconds, it will quit automatically.
⑨ -3 Save (Release) lock password : After entering the password, push RUN quickly and L,- - 0 will be indicated to release the lock password; if pushing L,- - 1, the password will be locked.

⚠ If you forget the locking password, please contact our Customer Service Dept. and they will solve the problem for you.

8. Wiring Example Instructions

Wiring Example 1

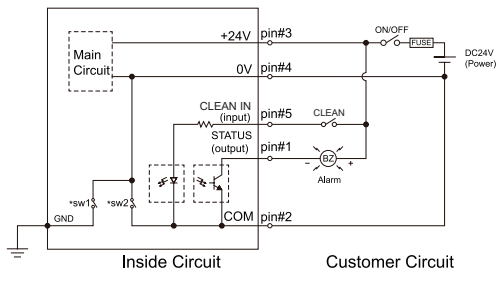

Wiring Example 2

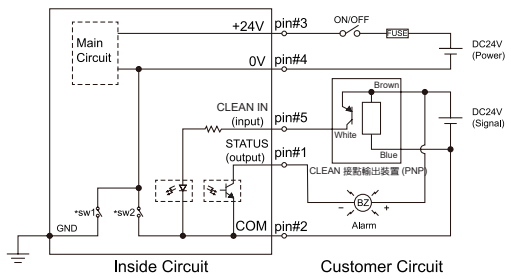

8-1. Wiring Example Instructions

Signal Switching (Mount behind the Drive Circuit Module)

Switch	Description	Default Value
1: SW1	Select 0V power for connecting with or isolating from the Grounding Terminal.	1 ON–Connection
2: SW2	Select 0V power for connecting with or isolating from the Connection COM.	2 OFF-Isolating

Main Body Description

Power Input Socket	pin#1 STATUS OUTPUT	Status signal output point
	pin#2 COM	Signal common terminal point (Signal 0V point)
I/O Connection Socket	pin#3 Power DC+24V	24V power input point
	pin#4 Power GND(0V)	0V power input point
	pin#5 PAUSE IN(10~30V)	Pause signal input point

9. Time Sequence Diagram Description

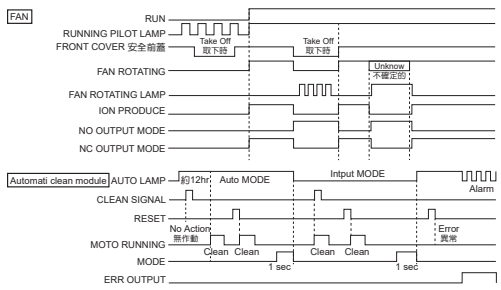

10. Warning

① Please don't use KGN IONIZER in excess of its specification range. Such use could result in product breakdowns, cessation of function, or damage. It could as well result in a significant reduction of its service life.
② Please don't touch the discharging needles, because it has a sharp-pointed tip.It could result in hand injury.
③ Please shut off power when performing wiring work. Leaving the power on could result in electric shock.
④ Please check the catalogue to ensure the IONIZER wiring is correct. Error wiring could lead to abnormal operation.
⑤ Installation location: Try to avoid locations with abundant of steam, oil vapor, dust, and high temperature and high humidity. **This product shall not be used at locations where explosion-proof is required.**
⑥ Please shut-off power when inspecting, cleaning and performing maintenance. Leaving the power on could result in electric shock.
⑦ Never touch the discharge needle when energized.Leaving the power on could result in electric shock.
⑧ Before replacing HV module, drive module or fan module of this product, be sure to disconnect the supply power or remove the power input terminal plug.
⑨ Before use, please be sure that grounding is properly executed.

11. Caution

① If the input power is less than DC24V, the air flow of the fan and the quantity of the released ions will drop and affect the ionizing effect.
② Ion balance will be more stable after warm up about 3~5 minutes.
③ When using the I/O connecting socket for inputting power, as per 8.Wiring Example Instructions.
④ If you forget the locking password, please contact our Customer Service Dept. and they will solve the problem for you.
⑤ If the red LED is illuminated, refer to Troubleshooting Instructions. If not avail, please contact this Company.
⑥ Please don't use KGN IONIZER for any other purpose than for static electricity removal.
⑦ If a failure or error occurs, please refer to the Troubleshooting Instructions first. If the problem cannot be solved and it must be adjusted or maintenance by a technician or with special instruments, please contact our Sales Engineer.

KGN IONIZER
TROUBLESHOOTING INSTRUCTIONS

FAN TYPE STATUS	POSSIBLE CAUSE	SOLUTION
The Fan will not turn	Power is not connected.	Connect power, for example: KIC-03、KIC-05
	The power input terminal is not completely inserted into the machine.	Insert the power input plug again.
	The power input wiring is wrong.	Refer to **8.** Wiring Example Instructions to confirm the wires.
	The machine has faulted.	Contact the Customer Service Dept.
The Fan will not turn: The operation indicator is flickering.	The RUN button is not pressed.	Push the RUN button to start the Fan.
The Fan remains inactive after pushing the operation button LED display L,- - 1	The machine is under operation locking status.	Refer to 7. Wiring Example Instructions to confirm the wires.
The Fan will not turn: The red alarm lamp is flickering.	The Front Cover (Fast Pin Cleaning Module) is not properly covered.	Restore the Front Cover.
	The switch of Front Cover (Fast Pin Cleaning Module) is faulted.	Contact the Customer Service Dept.
The Fan will not turn or the speed is too slow: The red alarm lamp is illuminated.	The capacity of power voltage or current is insufficient.	Confirm the capacity of power voltage and current.
	The Drive Module has faulted.	Contact the Customer Service Dept. for replacing the Drive Module.
	The Fan Module has faulted.	Contact the Customer Service Dept. for replacing the Fan Module.
The red alarm lamp is illuminated, but the Fan rotates normally. The green operation lamp is illuminated.	The capacity of power voltage or current is insufficient.	Confirm the capacity of power voltage and current.
	The Drive Module is not completed mounted.	Set up the Drive Module again.
	The HV Discharge Module is not completed mounted.	Set up the HV Discharge Module again.
	The Drive Module has faulted.	Contact the Customer Service Dept. for replacing the Drive Module.
	The HV Discharge Module has faulted.	Contact the Customer Service Dept. for replacing the HV Discharge Module.

FAN TYPE STATUS	POSSIBLE CAUSE	SOLUTION
The electrostatic electricity cannot be dispersed or the ionizing speed is too slow. The Green RUN lamp is illuminated. The Fan is operated normally. The red alarm lamp is not illuminated.	The capacity of the power voltage or the current is insufficient.	Confirm the capacity of power voltage and current.
	The Ionizing Pin is severely contaminated.	Clean the Discharge Pin.
	The HV Discharge Module is dampened; or a conductive substance is presented near around; or a conductive substance is affixed on the Front Cover, such as metal, carbon powder or dirt, etc.	Confirm the status of HV Discharge Module and the Rectifier Front Cover.
	The Drive Module has faulted.	Contact the Customer Service Dept. for replacing the Drive Module.
	The HV Discharge Module has faulted.	Contact the Customer Service Dept. for replacing the HV Discharge Module.
	The performance specification of the product is insufficient.	Contact the Customer Service Dept. for providing electrostatic improvement solutions.
Auto Indicator Flickers	Pin cleaning brush is jammed by foreign object.	Check if a foreign object has entered the front cover.
	The front cover motor of Pin Cleaning Module has failed.	Please contact the Service Center.
Auto indicator remains lluminated. External signal cannot be controlled.	External signal cannot be controlled when starting the Auto Pin Clean Mode.	Push MODE key to shift the mode function.

Dimensions(mm)

KIF-1000A

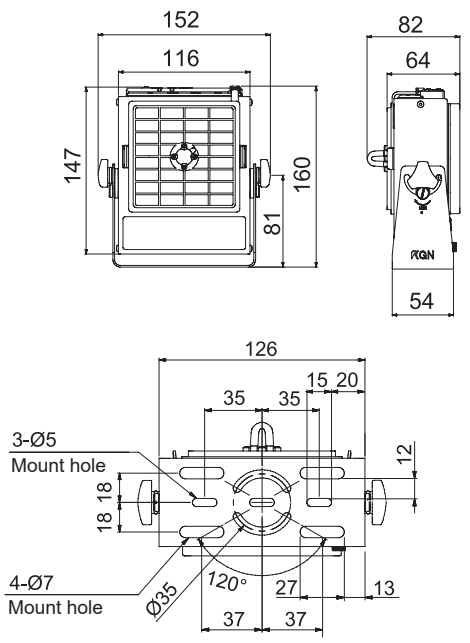

Dimensions(mm)

KIF-2000A

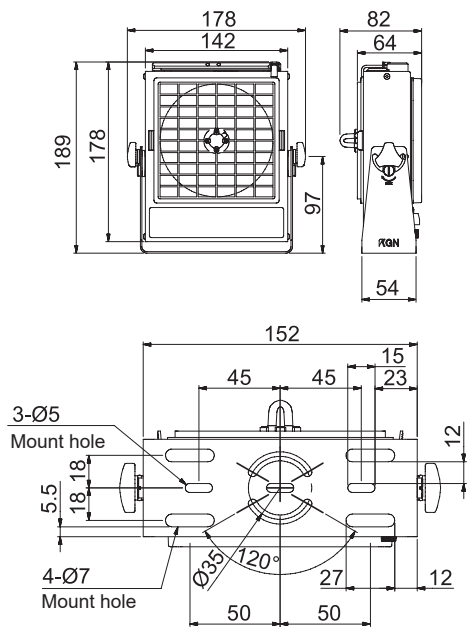

Dimensions(mm)

KIF-3000A

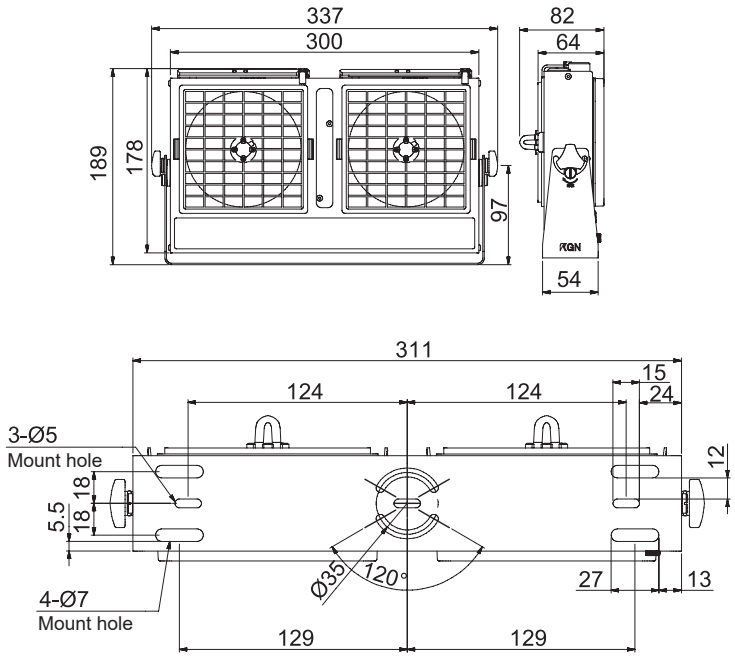

備忘錄
NOTE