KGN Dispensers 精密定量吐出裝置

- ANV503 氣壓式針頭閥 - 使用說明書

■特徵

- ANV503 是採用針頭閥及隔板構造，可調整流量吐出控制，適用於含填料的液體定量吐出應用。
- 接液部材質可依客戶需求對應各種膠材吐出應用。

標準仕樣規格

型式	ANV503
閥的構造	針頭閥
最小吐出量	0.01c.c
最大流量	3100c.c/min
適用黏度	~300Pa.s(~300,000cps)
接液部材質	SUS304
膜片材質	聚四氟乙烯 PTFE
材料入口尺寸	Ø7.0mm, 牙孔 Rc1/8(PT1/8)
最大作動速度	150 cycles/min.
作動氣壓入力	0.39~0.69MPa(4.0~7.0kgf/cm²)
重量	125g

- 最小吐出量會依針徑大小改變。
- 流量(c.c/min)：用水加壓 0.1MPa持續吐出1分鐘所得之測試值。

不適用的吐出材料產生情形

吐出材料	橡膠系接著劑等牽絲性強的材料	黏度 30 萬 MPa˙S 以上的高黏度材料	粒度 50μm 以上的填入材料
使用	 會呈現上記現象，導致對吐出應用造成妨礙。	單次的吐出會較費時間，使用的節奏上會產生問題。	閥座的耐久性會降低（即閥座使用壽命減短）。

洗淨及組立方法

【使用膠閥後請務必在材料硬化前予以清洗】

(1) 將吐出材料全部吐出後，將清洗溶劑倒入材料容器內，用微壓讓溶劑通過閥體。

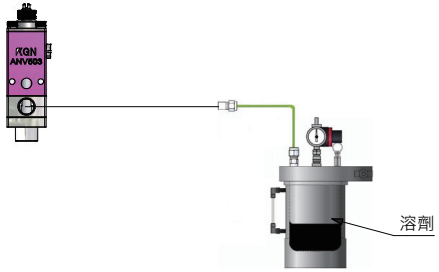

(2) 將接液部位的組件拆解後須將下記部品用超音波加以洗淨；洗淨後再以乾淨高壓氣體將洗淨處吹乾。

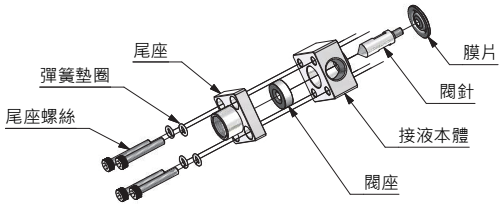

拆解、組立 注意要點

（拆解）

拆解注膠閥時，膜片、閥針、閥座、接液本體務必加以注意絕對勿使其有傷痕。避免造成吐出材料混入空氣及材料滴漏問題發生。

（組立）

將膜片安裝在驅動部本體時，請先注意膜片隔板的方向性，確認後再裝上。

閥針安裝時，手持閥針前端，向右旋緊後持 5mm 板手，再右旋約 1/4 圈。

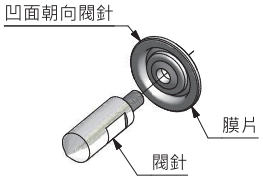

★（特別注意勿將閥針旋轉過緊，以免造成膜片破損，請小心安裝。）

系統裝配及設定

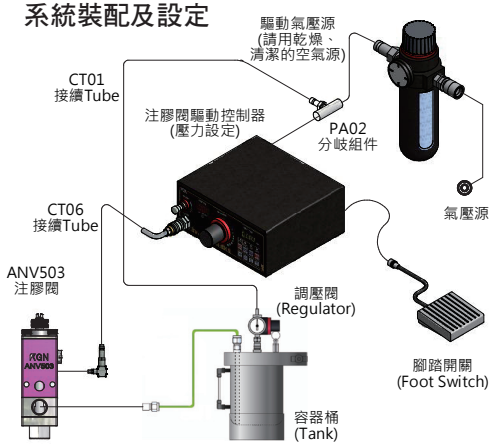

【材料壓送壓力】
因輸入的空氣會有變動的狀況，建議使用精密型調整組件。

【行程調整】
請依吐出量要求，作行程微調整動作。

分解圖及零件表

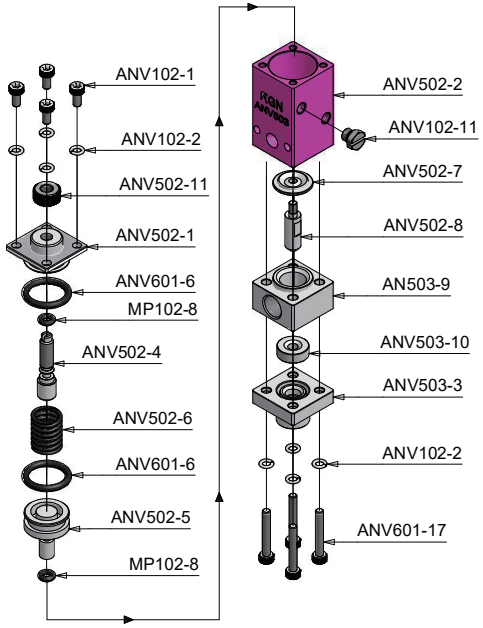

零件表			
零件編號	品名規格	材質	數量
ANV502-1	上蓋	SUS304	1
ANV502-2	作動本體	A6061-T6	1
ANV503-3	尾座	SUS304	1
ANV502-4	調整螺絲	SUS303	1
ANV502-5	活塞	SUS304	1
ANV502-6	彈簧	彈簧鋼	1
ANV502-7	膜片	PTFE	1
ANV502-8	閥針	SUS316	1
ANV503-9	接液本體	SUS304	1
ANV503-10	閥座	P.P	1
ANV502-11	鎖定螺帽	SUS303	1
ANV102-1	上蓋螺絲	SUS304	4
ANV102-2	彈簧墊片	SUS304	8
ANV102-11	排氣栓	黃銅鍍化學鎳	1
ANV601-6	O 型環	NBR	2
MP102-8	O 型環	NBR	2
ANV601-17	底座螺絲	SUS304	4

構造圖、外型尺寸圖

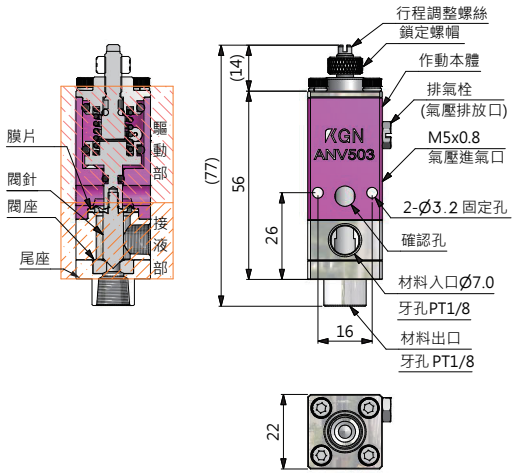

安全使用要點

- 若空氣隨材料混入注膠閥中，會產生氣泡而影響吐出效果。因此在使用前，請務必確實將氣泡消除。
- 注膠閥作動時會產生振動，務必確實固定之，實施固定加工時，請勿損傷閥體內部。為避免影響吐出效果，使用前，必須確實將氣泡消除。
- 除非有特別使用需要，勿將空氣壓排氣口堵塞住。
- 在清洗保養之際，處理使用過的溶劑時，務必加以注意切勿對環境造成污染或危害。
- 產品使用前，請確實瞭解本「使用說明書」內的相關說明。尤其務必將「清洗保養」的方法確實告知現場使用者。

保養與維護

- 驅動部中使用的 O 型環會因閥的作動而損耗，須加以更換。在分解、組立時若有產生傷痕亦務必更換新品。驅動部的 O 型環更換基準方面，在正常的使用狀況下，約可至 200 萬回。（僅供作參考值）
- 驅動閥作動的空氣，請務必要透過 5μm 以下過濾度的過濾器；以乾淨且乾燥的空氣加以應用。
- 膜片隔板的更換基準方面，通常約可至 200 萬回的程度。（僅供作參考值）
- 閥座會因使用材料及使用頻率而有耐久性的不同，就更換基準來看，有填料的材料使用方面約可達 10~30 萬回，無填料的材料使用方面則約可達 50~100 萬回。（僅供作參考值）
- 接液部油封的耐久性則依使用的材料材質、使用方法、使用頻度的狀況不同而有所差異。
- 使用會自然硬化的材料或會結晶化液體時，在使用後尚未硬化前，請一定要拆解清洗。

201904

KGN Dispensers 精密定量吐出裝置

ANV503 Instruction Manual

— ANV503 (Air Operated) Needle Valve —

■ Features

- The ANV503 consist of the Needle Valve and Diaphragm, which can be used to adjust and control he output flow rate and is applicable for the volumetric output of filling liquid.
- The material of liquid receiving section will be selected according to the gel used upon the requirement of the customer.

■ Standard specifications

Valve mode	ANV503
Valve Structure	Needle valve
Minimum Shot	0.01c.c
Fluid Flow(Max.)	3100c.c/min
Viscosity	~300Pa.s(~300,000cps)
Wetted parts material	SUS304
Diaphragm material	PTFE
Material port dimension	Ø7.0mm,Thread Rc1/8(PT1/8)
Operating cycle(Max.)	150 cycles/min.
Dispensing pressure	0.39~0.69MPa(4.0~7.0kgf/cm²)
Weight	125g

- The minimum shot volume depends on the dimension of valve needle.
- Volume(c.c/min)：0.1MPa/min water testing result.

Dissapplicable materials

Materials	Avoid using rubber-based adhesives, which have a stronger viscous effect.	Very high viscosity aterials more than 300,000 cp	Filler containing materials which particle size is more than 50 μm
Using	 If the above-said situation arises, output performance may be impeded.	Shot time may take longer.	The durability of the Valve Seat will be degraded (i.e. shorten the service life of the Valve Seat).

Cleaning and Assembly Method

【Be sure to dismantle the valve and clean it after use and before the material hardens】

(1)After discharging all of the output materials, pour the cleaning solvent into the container and then press the solvent through the valve body with low pressure.

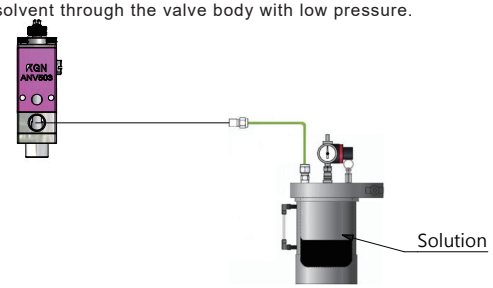

(2)After dismantling the components of the liquid-receiving section, clean the following parts and then blow the rocessed area with clean compressive air before assembling the components.

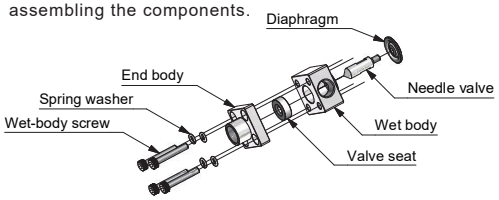

Cautions for Dismantling and Assembly

- When dismantling the Valve, care should be taken to prevent damaging the diaphragm, Valve Needle and Valve Seat in order to keep materials from dripping.
- When mounting the diaphragm on the Drive Unit, note the direction of the diaphragm in advance and then mount after confirming.
- When mounting the Valve Needle,hold the front section of the ValveNeedle and rotate it right tightly and then turn approximately a quarter turn manually with hex key(5mm).

★ (Important: Do not turn the Valve Needle too tight so as not to damage the diaphragm. During mounting, special care should be used in order to install it in place.)

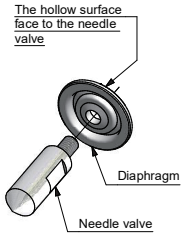

Assembly

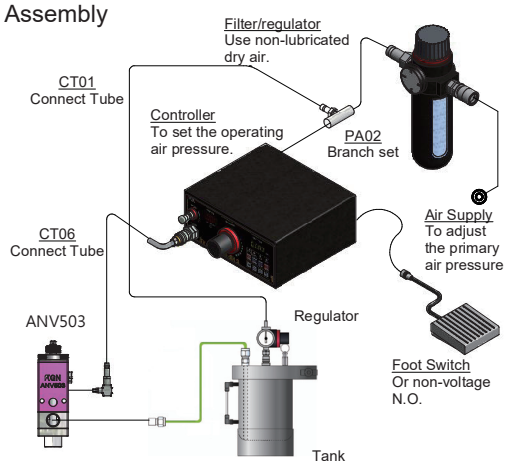

【Material Delivery Pressure】
As the operating air pres-sure is changeable, use precision regulator.

【Stroke Adjustment】
The stroke can be adjusted within 0~0.5mm scope. Be sure to perform the inching adjustment of the stroke according to the output volume.

Exploded View&Parts List

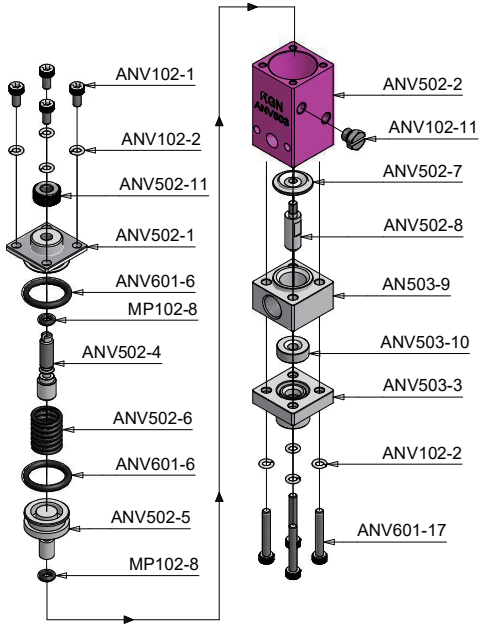

Parts List			
Parts NO.	Description	Material	QTY
ANV502-1	Top body	SUS304	1
ANV502-2	Drive body	A6061-T6	1
ANV503-3	End body	SUS304	1
ANV502-4	Adjust screw	SUS303	1
ANV502-5	Piston	SUS304	1
ANV502-6	Spring	SUP4	1
ANV502-7	Diaphragm	PTFE	1
ANV502-8	Needle valve	SUS316	1
ANV503-9	Wet body	SUS304	1
ANV503-10	Valve seat	P.P	1
ANV502-11	Lock knob	SUS303	1
ANV102-1	Cap screw	SUS304	4
ANV102-2	Spring washer	SUS304	8
ANV102-11	EXT. plug	Brass,electroless nickel	1
ANV601-6	O-ring	NBR	2
MP102-8	O-ring	NBR	2
ANV601-17	Wet-body screw	SUS304	4

Sectional Drawing and Dimensions

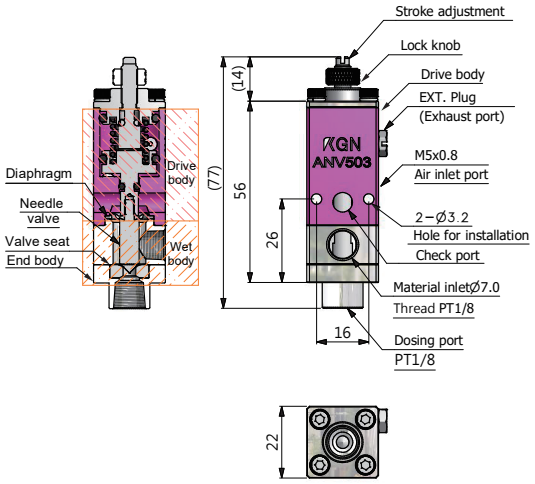

Safety Caution

- If air gets into the Valve along with the material, air bubbles will be produced and will affect the output. Due to this, be sure to thoroughly remove air bubbles before use.
- As the Valve tends to vibrate when activated, it must be properly secured. When securing, do not damage the internal side of the Valve Body. To avoid affecting output, air bubbles must be completely removed before use.
- Unless required for specific applications, do not block the compressive air exhaust outlet.
- During cleaning maintenance, the solvent must be properly treated to avoid causing pollution or hazard to the environment.
- Before using this product, be sure to read relevant descriptions of this "Instruction Manual" thoroughly. Further, it is also necessary to communicate the "cleaning and maintenance" methods to site users.

Maintenance

- As the O-Ring used in the Drive Unit tends to wear along with the valve actions, it must be replaced according to actual conditions. If damage is found during assembly, be sure to replace it with a new one.
- The operating air of the Drive Valve must be screened through the Filter in sieving pore below 5 μm.
- Normally, the diaphragm should be replaced after being used for 2,000,000 rounds. (for reference only)
- The valve life depends on the material used and operating onditions.
- The valve life is about 500,000~1,000,000 cycles for no filler containing materials and about 100,000~300,000 cycles for filler containing materials.
- After using material that hardens naturally or crystallized liquid, be sure to dismantle the valve and clean it after use and before the material hardens.