KGN Dispensers 精密定量吐出裝置

- ATV120S 氣壓式隔板閥 -
使用說明書

■特徵

- ATV120S 迷你輕量。
- 斷液性佳，實現精準的定量吐出。
- 接液部材質可依客戶需求對應各種膠材吐出應用。

標準仕樣規格

型式	ATV120S
閥的構造	氟素隔板閥
最小吐出量	0.005c.c
最大流量	190c.c/min
適用黏度	~0.5Pa.s(~500cps)
接液部材質	SUS316
膜片材質	PTFE
材料出 / 入口尺寸	牙孔 M5x0.8
作動氣壓入力	0.30~0.69MPa(3.1~7.0kgf/cm²)
重量	22.6g

- 最小吐出量會依針徑大小改變。
- 流量(c.c/min)：用水加壓 0.1MPa持續吐出1分鐘所得之測試值。

洗淨及組立方法

【使用膠閥後請務必在材料硬化前予以清洗】

(1) 將吐出材料全部吐出後，將清洗溶劑倒入材料容器內，用微壓讓溶劑通過閥體。

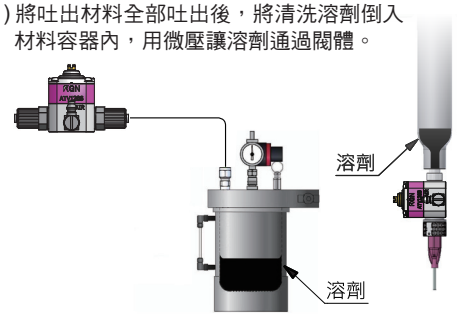

(2) 將接液部位的組件拆解後洗淨。

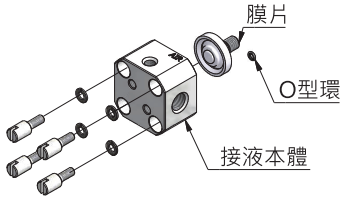

拆解、組立 注意要點

(拆解)

拆解注膠閥時，膜片、接液本體務必加以注意絕對勿使其有傷痕。避免造成吐出材料混入空氣及材料滴漏問題發生。

注意：避免O環掉落。

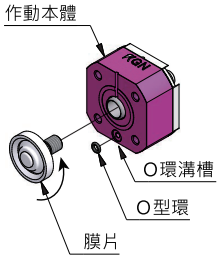

(組立)

請確認膜片無破損後，手鎖於作動本體正旋到底轉緊。

O環放在作動本體上的O環溝槽，接液本體氣孔對準O環組立。

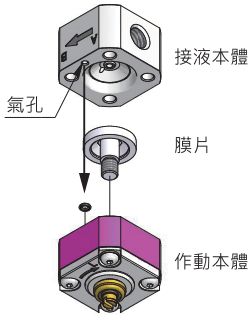

系統裝配及設定

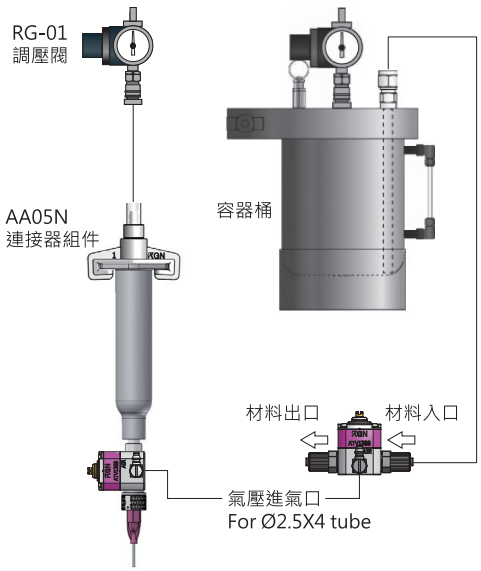

分解圖及零件表

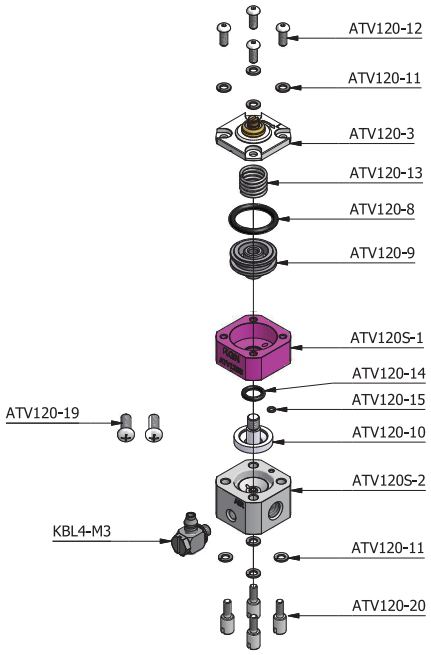

零件表			
零件編號	品名規格	材質	數量
ATV120S-1	作動本體	A6061-T6	1
ATV120S-2	接液本體	SUS316	1
ATV120-3	調整上蓋組	調整 C3604 上蓋 黃銅鍍化學鎳	1
ATV120-8	O型環	NBR	1
ATV120-9	活塞	A6061-T6	1
ATV120-10	膜片	PTFE	1
ATV120-11	彈簧墊片	SUS304	8
ATV120-12	螺絲	SUS304	4
ATV120-13	彈簧	SWP	1
ATV120-14	O型環	NBR	1
ATV120-15	O型環	NBR	1
ATV120-19	固定螺絲 M2.5	CarbonSteel	2
ATV120-20	一字螺絲 M2	SUS303	4
KBL4-M3	金屬接頭 M3	SUS303	1

構造圖、外型尺寸圖

行程調整螺絲使用要點:
- 未入料不可旋轉行程調整螺絲，以免膜片損壞。
- 行程調整螺絲右旋流量漸小，停止吐出時，即為膜片下始點，切勿再下旋，以免膜片損壞。

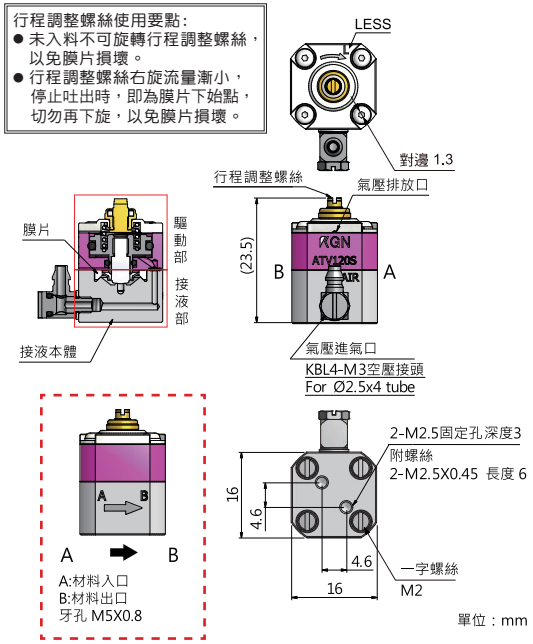

安全使用要點

- 若空氣隨材料混入注膠閥中，會產生氣泡而影響吐出效果。因此在使用前，請務必確實將氣泡消除。
- 注膠閥作動時會產生振動，務必確實固定之，實施固定加工時，請勿損傷閥體內部。為避免影響吐出效果，使用前，必須確實將氣泡消除。
- 除非有特別使用需要，勿將空氣壓排氣口堵塞住。
- 在清洗保養之際，處理使用過的溶劑時，務必加以注意切勿對環境造成污染或危害。
- 產品使用前，請確實瞭解本「使用說明書」內的相關說明。尤其務必將「清洗保養」的方法確實告知現場使用者。

保養與維護

- 驅動部中使用的O型環會因閥的作動而損耗，須加以更換。在分解、組立時若有產生傷痕亦務必更換新品。驅動部的O型環更換基準方面，在正常的使用狀況下，約可至 200 萬回。(僅供作參考值)
- 驅動閥作動的空氣，請務必要透過 5μm 以下過濾度的過濾器；以乾淨且乾燥的空氣加以應用。
- 膜片隔板的更換基準方面，通常約可至 200 萬回的程度。(僅供作參考值)
- 閥座會因使用材料及使用頻率而有耐久性的不同，就更換基準來看，有填料的材料使用方面約可達 10~30 萬回，無填料的材料使用方面則約可達 50~100 萬回。(僅供作參考值)
- 接液部油封的耐久性則依使用的材料材質、使用方法、使用頻度的狀況不同而有所差異。
- 使用會自然硬化的材料或會結晶化液體時，在使用後尚未硬化前，請一定要拆解清洗。

20240116

KGN Dispensers 精密定量吐出装置

ATV120S Instruction Manual

— ATV120S (Air Operated) PTFE Diaphragm Valve —

■ Features

- ATV120S PTFE diaphragm valve is compact size and light in weight.
- Dispense stable in liquid materials with filler.
- The material of liquid receiving section will be selected according to the gel used upon the requirement of the customer.

■ Standard specifications

Valve mode	ATV120S
Valve structure	PTFE diaphragm valve
Minimum shot	0.005c.c
Fluid flow(Max.)	190c.c/min
Viscosity	~0.5Pa.s(~500cps)
Wetted parts material	SUS316
Diaphragm material	PTFE
Material inlet / dosing port dimension	Thread M5x0.8
Dispensing pressure	0.30~0.69MPa(3.1~7.0kgf/cm²)
Weight	22.6g

- The minimum shot volume depends on the dimension of valve needle.
- Volume(c.c/min)：0.1MPa/min water testing result.

Cleaning and Assembly Method

Be sure to dismantle the valve and clean it after use and before the material hardens

After discharging all of the output materials, pour the cleaning solvent into the container and then press the solvent through the valve body with low pressure.

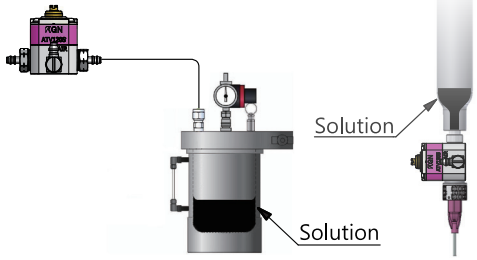

After dismantling the components of the liquid-receiving section, clean the valve.

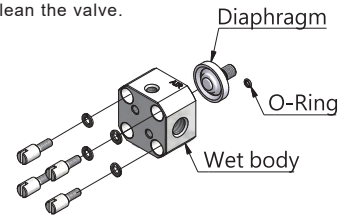

Cautions for Dismantling and Assembly

Dismantling

When dismantling the Valve, care should be taken to prevent damaging the diaphragm and Valve Head in order to keep air from mixing in the output material and to keep materials from dripping.

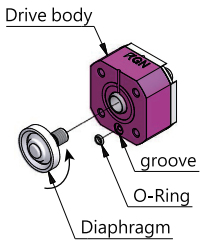

Assembly

When mounting the diaphragm on the Drive Unit, check if the Spacer is frayed and then mount after being confirmed as intact. When mounting the diaphragm, turn it lightly till stops.

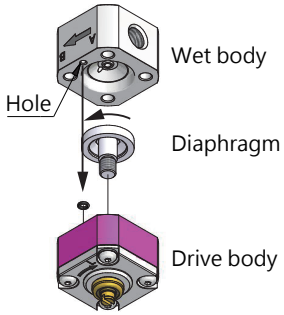

Assembly

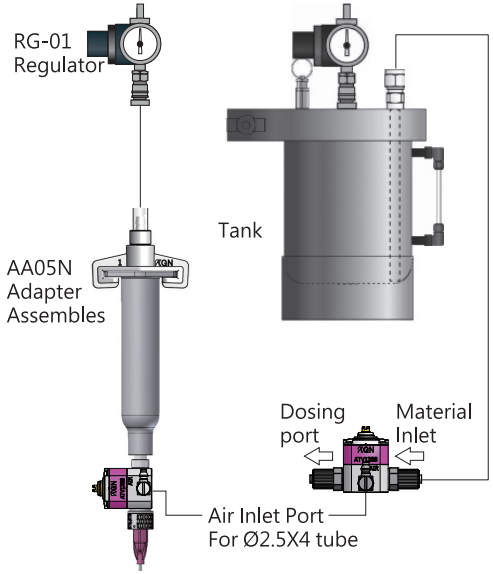

Exploded View&Parts List

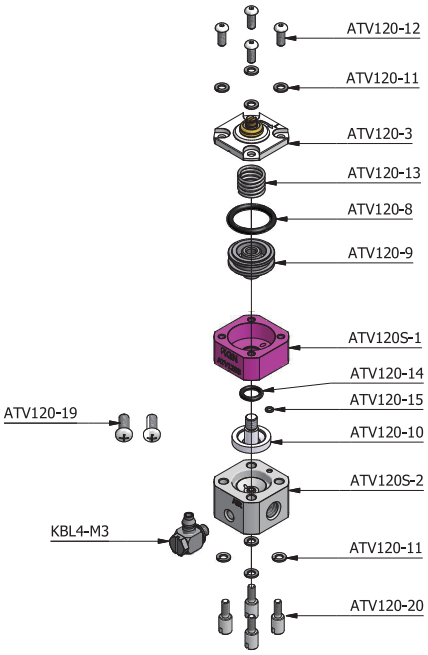

Parts List			
Parts NO.	Description	Material	Quantity
ATV120S-1	Drive body	A6061-T6	1
ATV120S-2	Wet body	SUS316	1
ATV120-3	Adjustment and Top body	Adjustment C3604 Top body Brass,electroless nickel	1
ATV120-8	O-ring	NBR	1
ATV120-9	Piston	A6061-T6	1
ATV120-10	Diaphragm	PTFE	1
ATV120-11	Spring washer	SUS304	8
ATV120-12	Screw	SUS304	4
ATV120-13	Spring	SWP	1
ATV120-14	O-ring	NBR	1
ATV120-15	O-ring	NBR	1
ATV120-19	Screw M2.5	CarbonSteel	2
ATV120-20	Slotted Screw M2	SUS303	4
KBL4-M3	Metal Fitting M3	SUS303	1

Sectional Drawing and Dimensions

Stroke adjustment instructions:
- Don't rotate stroke adjustment when the liquid isn't into the wet body
  In order to avoid the diaphragm being damaged.
- As you turn right the stroke adjustment, the flow will diminish.When the liquid stop spitting out,which means that the diaphragm is to the stop point,don't turn it right any mors so as to avoid the diaphragm being damaged.

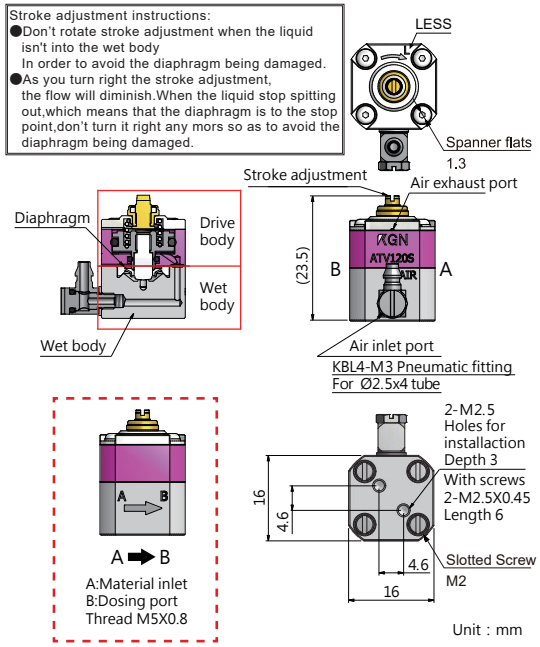

Safety Caution

- If air gets into the Valve along with the material, air bubbles will be produced and will affect the output. Due to this, be sure to thoroughly remove air bubbles before use.
- As the Valve tends to vibrate when activated, it must be properly secured. When securing, do not damage the internal side of the Valve Body. To avoid affecting output, air bubbles must be completely removed before use.
- Unless required for specific applications, do not block the compressive air exhaust outlet.
- During cleaning maintenance, the solvent must be properly treated to avoid causing pollution or hazard to the environment.
- Before using this product, be sure to read relevant descriptions of this "Instruction Manual" thoroughly. Further, it is also necessary to communicate the "cleaning and maintenance" methods to site users.

Maintenance

- As the O-Ring used in the Drive Unit tends to wear along with the valve actions, it must be replaced according to actual conditions. If damage is found during assembly, be sure to replace it with a new one.
- The operating air of the Drive Valve must be screened through the Filter in sieving pore below 5 μm.
- Normally, the diaphragm should be replaced after being used for 2,000,000 rounds. (for reference only)
- The valve life depends on the material used and operating onditions.
- The valve life is about 500,000~1,000,000 cycles for no filler containing materials and about 100,000~300,000 cycles for filler containing materials.
- After using material that hardens naturally or crystallized liquid, be sure to dismantle the valve and clean it after use and before the material hardens.